B.E.G. LUXOMAT® net

PD4N-KNXs-DX-FC

Prod.No. 93516 EAN: 4007529935161

- Voltage: via KNX BUS
- Dimensions: Ø 106 x 68 mm
- Typ. power input: 12 mA

Order data

Designation	Colour	Art.No
PD4N-KNXs-DX-FC	white	93516

Accessories

Designation	Colour	Art.No
BLE-IR-Adapter	black	93067
IR-PD-KNX	-	92123
IR-PD-KNX-Mini	-	93398
lens PD4N, Cover ring	anthracite	93731
lens PD4N, Cover ring	black	93733
lens PD4N, Cover ring	traffic white	93732
Corridor lens PD4N type A	white	93073
Corridor lens PD4N type A, Cover ring	traffic white	93742
Corridor lens PD4N type A, Cover ring	anthracite	93741
Corridor lens PD4N type A, Cover ring	black	93743
Wire basket BSK (Ø 200 x 90 mm)	white	92199
Wall holder PD2N/4N Typ A	white	93164

Technical data

Voltage:	via KNX BUS
Dimensions:	Ø 106 x 68 mm
Typ. power input:	12 mA
Detection area:	horizontal 360° (Ceiling mounting)
Range:	max. Ø 24 m across max. Ø 8 m towards max. Ø 6.4 m seated
Monitored area (tangential movement):	450 m² / 2.5 m mounting height
Mounting height min./max./recommended:	2 m / 10 m / 2.5 m
Degree / class of protection:	IP20 / Class III
Impact strength:	IK04
Temperature measurement range:	-5 °C to +45 °C
Ambient temperature:	-25 °C to +55 °C
Housing:	polycarbonate, UV-resistant
Number of light sensors:	2
Material color:	white mat, similar to RAL9010
Number of PIR sensors:	4
KNX TP 256:	Yes
Orientation light:	5 – 100 % / OFF / 1 min – 255 min
Night light:	5 – 100 %
Brightness set value:	5 – 2000 Lux

Product information

KNX occupancy detector with integrated KNX bus connector

KNX Secure ready

HCL/RGB control

Parameterisation from ETS 5 for integration into KNX systems

Individual adaption of detection sensitivity for each PIR sensor

PIR sensors can be deactivated individually

Direction of movement can be identified

Mixed light measurement using internal, external and remote (optional) light sensors

Intelligent semi-automatic mode, occupancy-independent regulating mode (photoelectric switch), full automatic mode

1 x Light (for regulating or switching), 1 x slave output, 3 separate HVAC-blocs

Regulation of up to three lighting groups using offset (external influence possible)

Short presence, self-adjusting follow-up time, corridor function

Various locking functions

Soft-start

Two logic modules

Recall of light scenes

Deactivatable status indicators

Temperature- and noise sensor

The product database for import into the ETS database can be downloaded from the B.E.G. homepage.

Detection area can be extended thanks to master-slave-mode

Extensive optimization options for light measurement

Measured light value is communicated to the bus

Adaption of dimming curve

Bidirectionally remote control-capable with the IR adapter and the B.E.G. smartphone app

PIN code

IR remote control-capable via IR remote control (optionally)

5 button remote control, programmable at choice (accessory)

Programming button (phys. address) can be operated via remote control

HVAC mode (0=automatic, 1=comfort, 2=stand-by, 3=economy, 4=antifreeze/heat protection)

Manual influence via external KNX push buttons possible

Function control (heartbeat, cyclical sending)

Occupancy simulation

Forced switch-off

Intelligent central-off function

Premonition of switch-off

Burn-in function for fluorescent lamps selectable from 1h till 100h

Behaviour upon bus voltage return definable at choice

Variable safety pause after switching off the lights

Typical applications:
monitoring of large areas like underground garages, gyms, warehouses, loading ramps, halls

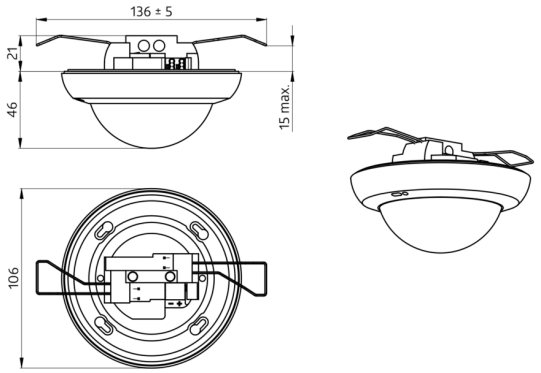
136 ± 5
21
46
15 max.
106

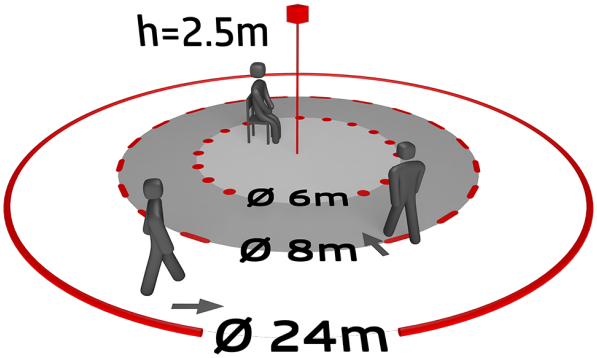
h=2.5m
Ø 6m
Ø 8m
Ø 24m

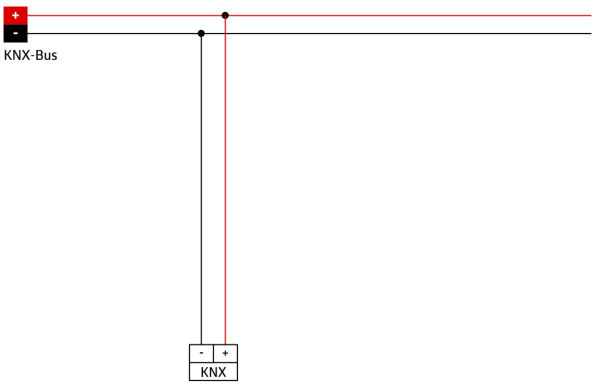
+
-
KNX-Bus
-
+
KNX

Accessories

BLE-IR-Adapter
Art.No: 93067

Dimensions: 40 x 55 x 103 mm
Material color: black
Frequency: 2.4 GHz ISM band, GFSK
0.2 dBm + 5.3 dBi = 5.5 dBm

IR-PD-KNX
Art.No: 92123

Battery: 3.0 V Lithium CR2032 (inclusive)
Dimensions: 80 x 60 x 8 mm
Material color: -

IR-PD-KNX-Mini
Art.No: 93398

Battery: 3.0 V Lithium CR2032 (inclusive)
Dimensions: 57 x 35 x 7 mm
Material color: -

lens PD4N, Cover ring
Art.No: 93731

Detection area: horizontal 360° (Ceiling mounting)
Range: max. Ø 24 m across
max. Ø 8 m towards
max. Ø 6.4 m seated
Monitored area (tangential movement): 450 m² / 2.5 m mounting height

lens PD4N, Cover ring
Art.No: 93733

Detection area: horizontal 360° (Ceiling mounting)
Range: max. Ø 24 m across
max. Ø 8 m towards
max. Ø 6.4 m seated
Monitored area (tangential movement): 450 m² / 2.5 m mounting height

lens PD4N, Cover ring
Art.No: 93732

Detection area: horizontal 360° (Ceiling mounting)
Range: max. Ø 24 m across
max. Ø 8 m towards
max. Ø 6.4 m seated
Monitored area (tangential movement): 450 m² / 2.5 m mounting height

Corridor lens PD4N type A
Art.No: 93073

Detection area: horizontal 360° (Ceiling mounting)
Range: max. Ø 40 m across
max. Ø 20 m towards
Monitored area (tangential movement): 250 m² / 2.5 m mounting height

Corridor lens PD4N type A, Cover ring
Art.No: 93742

Detection area: horizontal 360° (Ceiling mounting)
Range: max. Ø 40 m across
max. Ø 20 m towards
Monitored area (tangential movement): 250 m² / 2.5 m mounting height

Corridor lens PD4N type A, Cover ring
Art.No: 93741

Detection area: horizontal 360° (Ceiling mounting)
Range: max. Ø 40 m across
max. Ø 20 m towards
Monitored area (tangential movement): 250 m² / 2.5 m mounting height

Corridor lens PD4N type A, Cover ring
Art.No: 93743

Detection area: horizontal 360° (Ceiling mounting)
Range: max. Ø 40 m across
max. Ø 20 m towards
Monitored area (tangential movement): 250 m² / 2.5 m mounting height

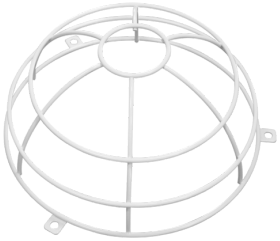

Wire basket BSK (Ø 200 x 90 mm)
Art.No: 92199

Dimensions: Ø 200 x 90 mm
Impact strength: IK09
Housing: coated steel basket

Wall holder PD2N/4N Typ A
Art.No: 93164

Dimensions: 133 x 106 x 66 mm
Degree / class of protection: IP54
Housing: polycarbonate, UV-resistant