B.E.G. LUXOMAT®

PD3N-2C-FM

Prod.No. 92188 EAN: 4007529921881

- Voltage: 110 – 240 V AC 50 / 60 Hz
- Dimensions: Ø 106 x 63 mm
- Power consumption: approx. 0.5 W

Order data

Designation	Colour	Art.No
PD3N-2C-FM	white	92188

Areas of application

- toilets
- equipment rooms
- corridors/hallways
- staircases

Accessories

Designation	Colour	Art.No
RC-Arc extinction kit	white	10880
Mini-RC-Arc extinction kit		10882
BLE-IR-Adapter	black	93067
IR-PD3N-2C	-	92115
IR-PD-Mini	-	92159
Wire basket BSK (Ø 200 x 90 mm)	white	92199
Cover ring PD3N FM		93087

Technical data

Voltage:	110 – 240 V AC 50 / 60 Hz
Dimensions:	Ø 106 x 63 mm
Power consumption:	approx. 0.5 W
Detection area:	horizontal 360° (Ceiling mounting)
Range:	max. Ø 10 m across max. Ø 6 m towards max. Ø 4 m seated
Monitored area (tangential movement):	78 m² / 2.5 m mounting height
Mounting height min./max./recommended:	2 m / 5 m / 2.5 m
Degree / class of protection:	IP20 / Class II
Impact strength:	IK04
Ambient temperature:	-25 °C to +50 °C
Housing:	polycarbonate, UV-resistant
Material color:	white mat, similar to RAL9010
Channel 1 (lighting control)	
Switching power:	2300 W, cos φ = 1 1150 VA, cos φ = 0.5 800 W LED max. inrush current Ip (20 ms) = 165 A max. inrush current Ip (200 µs) = 800 A
Type of contact (k):	1x µ-contact, NO contact with tungsten pre-make contact
Follow-up time:	30 sec – 30 min, Pulse
Switch-on threshold:	10 – 2000 Lux
Channel 2 (HVAC control potential-free (dry))	
Switching power:	3 A (230 V), cos φ = 1
Type of contact:	1x NO contact (dry)
Follow-up time:	5 min – 120 min

Product information

Remote control-capable ceiling motion detector

One channel for light switching

Zero crossing switching

One additional potential-free (dry) contact for HVAC

Additional functions can be set up using the optional remote control.

Application examples:
toilets, equipment rooms, corridors/hallways, staircases

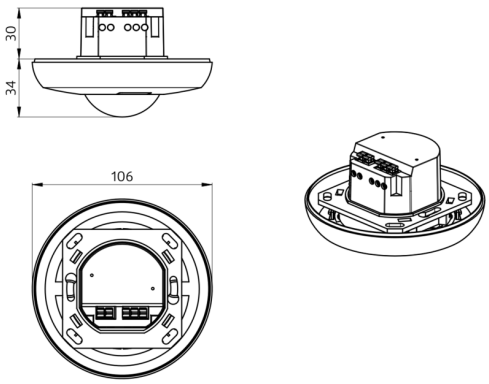
30
34
106

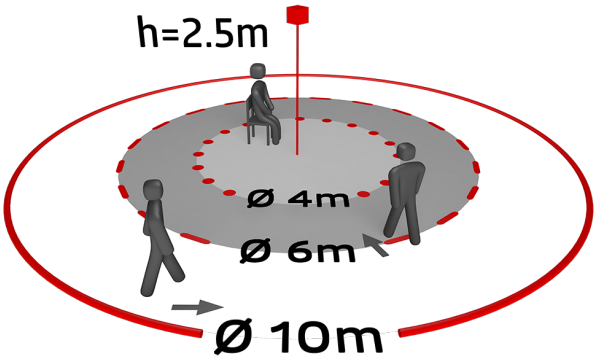
h=2.5m
Ø 4m
Ø 6m
Ø 10m

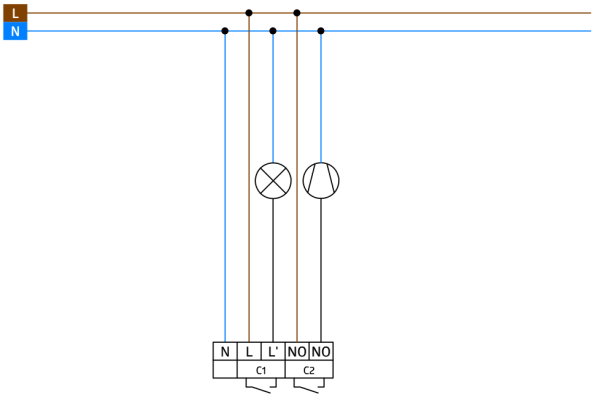
L
N
N
L
L'
NO
NO
C1
C2

Accessories

RC-Arc extinction kit
Art.No: 10880

Voltage: 230 V AC ±10%
Dimensions: 38 x 12 x 26 mm
Degree / class of protection: IP20 / Class II

Mini-RC-Arc extinction kit
Art.No: 10882

Voltage: 230 V AC ±10%
Dimensions: 50 x 23 x 8 mm
Degree / class of protection: IP20 / Class II

BLE-IR-Adapter
Art.No: 93067

Dimensions: 40 x 55 x 103 mm
Material color: black
Frequency: 2.4 GHz ISM band, GFSK
0.2 dBm + 5.3 dBi = 5.5 dBm

IR-PD3N-2C
Art.No: 92115

Battery: 3.0 V Lithium CR2032 (inclusive)
Dimensions: 80 x 60 x 8 mm
Material color: -

IR-PD-Mini
Art.No: 92159

Battery: 3.0 V Lithium CR2032 (inclusive)
Dimensions: 57 x 35 x 7 mm
Material color: -

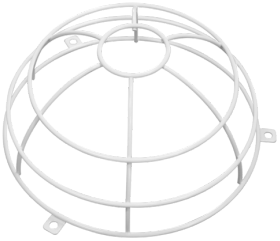

Wire basket BSK (Ø 200 x 90 mm)
Art.No: 92199

Dimensions: Ø 200 x 90 mm
Impact strength: IK09
Housing: coated steel basket

Cover ring PD3N FM
Art.No: 93087

Dimensions: Ø 106 x 17 mm
Housing: polycarbonate, UV-resistant
Material color: jet black mat, similar to RAL9005