B.E.G. LUXOMAT®

IR-RC-LD

Prod.No. 92649 EAN: 4007529926497

- Battery: 3 x 1.5 V Micro AAA (not included)
- Dimensions: 83 x 53 x 17 mm
- Material color: -

Order data

Designation	Colour	Art.No
IR-RC-LD	-	92649

Technical data

Battery:	3 x 1.5 V Micro AAA (not included)
Dimensions:	83 x 53 x 17 mm
Material color:	-
Transmit range:	**clouded/dark:** max. 12 m

Product information

Infrared remote control for conveniently setting or changing parameters

Especially for long distances

Comes complete with a wall bracket

Easy programming of the motion detectors RC-plus next 130, 230 and 280 as well as the LED-floodlight FL2N-LED-230 and the automatic lights AL2-RC-plus 130, 230 and 280

The functions of the remote control are described with the respective device

Suitable for: 93321, 93323, 93324, 93331, 93333, 93334, 93341, 93343, 93344, 93346, ...

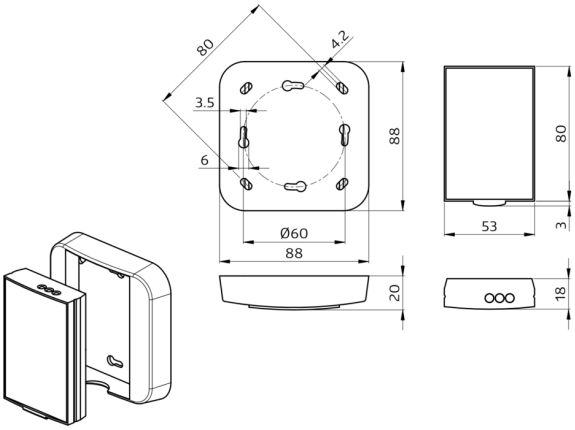
80
4.2
3.5
6
88
Ø60
88
20
80
53
3
18